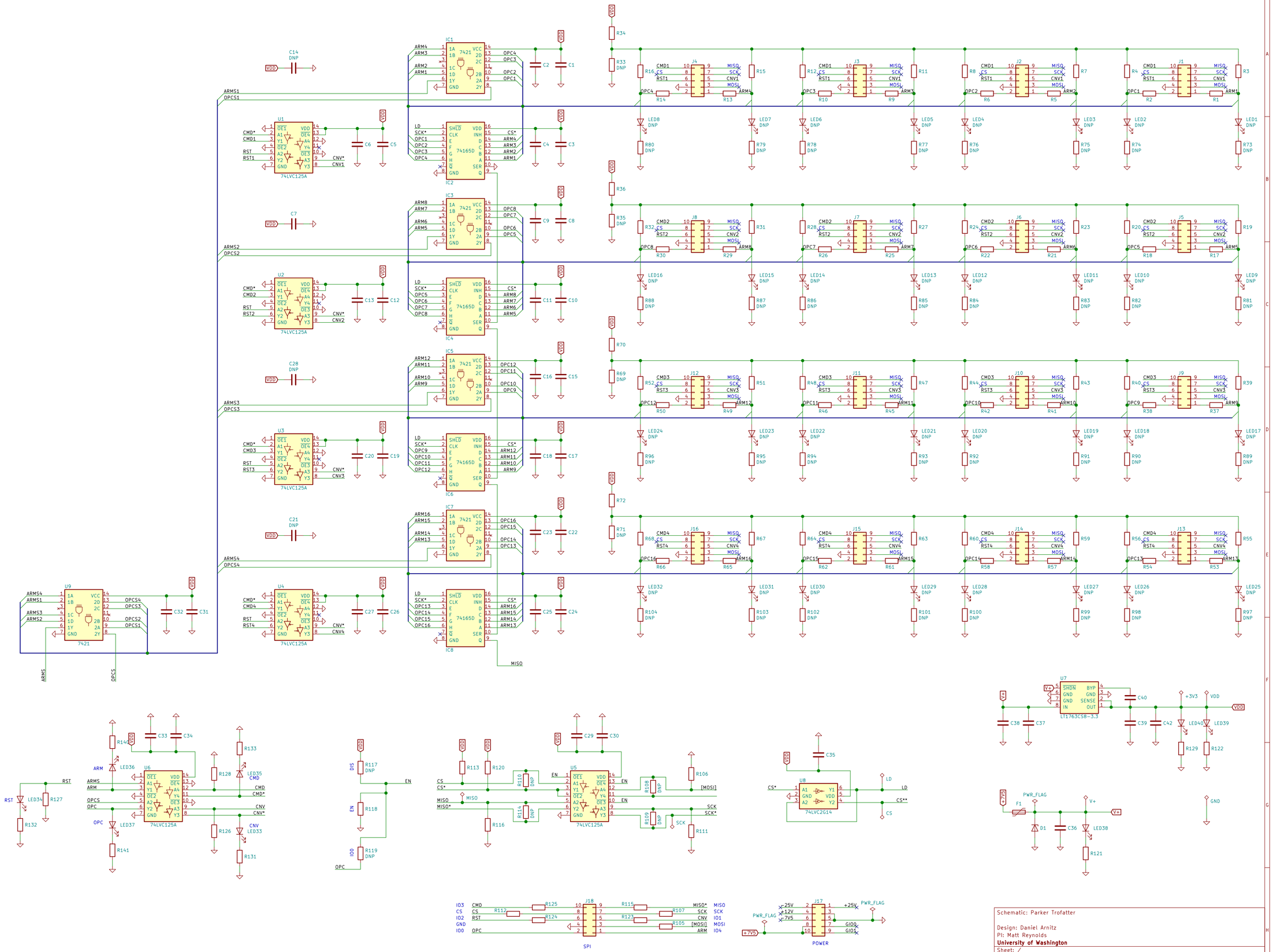

Schematic: Parker Trofatter

Design: Daniel Arnitz
PI: Matt Reynolds
University of Washington

Sheet: /
File: sample_hub.sch

Title: Sample Control Hub

Size: A2	Date: 2026-01-19	**Rev: 1.0; HW: 1**
KiCad E.D.A. kicad 5.1.5+dfsg1-2build2		Id: 1/1